SIEMENS

iQ700, Built-in compact oven with steam function, 60 x 45 cm, Black CS958GCB1

Included accessories

1 x enamel baking tray, 1 x grid, 1 x universal pan, size XL, 1 x sponge, punched, 1 x steam container, unpunched, size M

Optional accessories

AOVG9MF00S Mech. Child safety lock (Gap size: 4mm), HZ32WA00 wireless roastingSensor, HZ531010 Baking tray, non-stick ceramic coated, HZ532010 Universal pan, non-stick ceramic coated, HZ617000 Pizza pan, enamelled, HZ629070 Air Fry & Grill tray, HZ631070 Baking tray, enamelled, HZ632070 Multipurpose pan, enamelled, HZ638D00 Full ext rails, level independent, steam, HZ65MA00 Assembly kit for vertical installation, HZ664000 Baking and roasting grid (steam), HZ66D52 2 steamcontainer(punched/unpunched)sizeM, HZ66X600 Decor list, HZ66X650 Cover Strip, HZ915003 Glass roasting dish, 5,4 L, HZG0AS00 Connecting cable 3m

The intelligent fullSteam Plus oven with Cooking Assistant for intuitive programme setting and roastingSensor Plus for excellent results.

- ✓ TFT-Touchdisplay Pro – Large colour touch display for comfortable operation.
- ✓ cookControl Pro – Excellent results, whatever the recipe or circumstances.
- ✓ Cooking Assistant: Intuitively set the right programme.
- ✓ fullSteam Plus with sous-vide – For healthy and great-tasting meals.
- ✓ pulseSteam - Crispier and juicier with added water vapour.

Features

Technical Data

Gross weight: ..... 84.000 lbs
Design: ..... Built-in
Door opening: ..... Drop down
Required niche size for installation (HxWxD): ..450-455 x 560-568 x 550 mm
Dimensions: ..... 455x594x548 mm
Dimensions of the packed product (HxWxD): .....540x650x690 mm
Control Panel Material: .....Glass
Door Material: .....Glass
Net weight: .....35.7 kg
Length electrical supply cord: ..... 150 cm
Heating modes:: ..... Defrost, Steam 100%, fermentation, Regeneration, Sous-vide, 4D hot air, Air fry, Full width grill, Hotair gentle, Intensive heat, Half width grill, Conventional heat, Conventional heat gentle, Pizza setting, low temperature cooking, coolStart, Bottom heat, Hot air grilling, pre-heating, warming
Time-setting Options: .....Start and Stop
Fuse protection: .....16 A
Voltage: .....220-240 V
Frequency: .....50; 60 Hz
Plug type: ..... Gardy plug w/ earthing
Source of energy: ..... Electric
Fuse protection: .....16 A
Voltage: .....220-240 V
Frequency: .....50; 60 Hz
Plug type: ..... Gardy plug w/ earthing
Dimensions of the packed product: ..... 21.25 x 25.59 x 27.16
Net weight: ..... 79.000 lbs
Included accessories: 1 x enamel baking tray, 1 x grid, 1 x universal pan, 1 x steam container, punched, size XL, 1 x sponge, 1 x steam container, punched, size M, 1 x steam container, unpunched, size M

4 242003 901519

SIEMENS

iQ700, Built-in compact oven with steam function, 60 x 45 cm, Black CS958GCB1

Features

Type of oven / heating system:

- Compact steam oven with 24 heating methods: 4D hotAir, Conventional heat, hotAir grilling, Full width grill, Half width grill, Pizza setting, coolStart, Bottom heat, Intensive heat, Gentle heating, Plate warming setting, Keep warm, hotAir gentle, Conventional heat gentle, Air fry, Steam, Regeneration with steam, Fermentation with steam, Defrost with steam, sous-vide cooking, hotAir grilling + steam, warming + steam, 4D hotAir + steam, Top/bottom heat + steam
- Compact steam oven with 24 heating methods: Steam, Regeneration with steam, Fermentation with steam, Defrost with steam, sous-vide cooking
- Heating methods only via Home Connect App: let rest, preheating
- Temperature range 30 °C - 250 °C
- fullSteam Plus
- Cavity volume: 47 l
- Cavity: smooth

Hook-in racks / rails

- Number of shelf levels: 3
- varioClip rails Plus, full extension, with Stop function

Design:

- blackSteel application
- Touchcontrol
- studioLine Glass handle
- Cavity inner surface: enamel anthracite

Cleaning:

- ecoClean Plus: coating of ceiling, back panel, side liners
- humidClean Plus, ecoClean Plus program
- Full glass inner door

Comfort:

- Cooking Assistant
- TFT-Touchdisplay Pro
- electronic clock
- Temperature proposal
- Actual temperature display
- Optical temperature control
- Drop down door
- softMove for gentle opening and closing of the oven door
- cookControl Pro
- roasting sensor
- roastingSensor Plus
- fastPreheat
- coolStart
- steamBoost - add for 3min intensive steam with a touch of a button.
- There are different steam intensities selectable: steam level high, steam level middle, steam level low
- LED illumination, Independent oven interior light button
- Water tank empty indicator
- Location of the steam generator is outside of the cavity
- Integral cooling fan
- Home Connect ready on Wi-Fi
- 4D hotAir: even heat distribution on any level, also simultaneously

Accessory:

- 1 x steam container, punched, size XL, 1 x steam container, unpunched, size M, 1 x grid, 1 x sponge, 1 x universal pan, 1 x enamel baking tray, 1 x steam container, punched, size M

Environment and Safety:

- Low door temperature
- Triple glazed door with heat reflective glass glazed CoolTouch door
- Child lock
- Residual heat indicator
- Start-/Stop button
- Door contact switch

Technical Information

- Length of mains cable: 150 cm
- Nominal voltage: 220 - 240 V
- Total connected load electric: 3.3 KW
- Energy efficiency rating (acc. EU Nr. 65/2014): A+(at a range of energy efficiency classes from A+++ to D)
- Energy consumption per cycle in conventional mode: 0.73 kWh
- Energy consumption per cycle in fan-forced convection mode: 0.61 kWh
- Number of cavities: 1
- Heat source: electrical
- Cavity volume: 47 l

Dimensions:

- Appliance dimension (HxWxD): 455 mm x 594 mm x 548 mm
- Niche dimension (HxWxD): 450 mm - 455 mm x 560 mm - 568 mm x 550 mm
- “Please reference the built-in dimensions provided in the installation drawing”
- We recommend you to choose complementary products within IQ700, in order to assure an optimal design combination of your Built-In appliances.

SIEMENS

iQ700, Built-in compact oven with steam function, 60 x 45 cm, Black CS958GCB1

Dimensioned drawings

Installing two appliances on top of each other
Air exchange

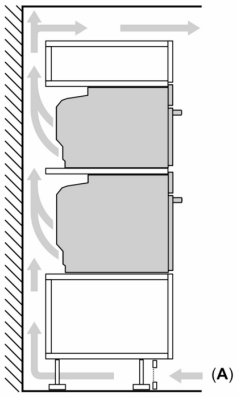

A: Air inlet ≥ 200 cm²

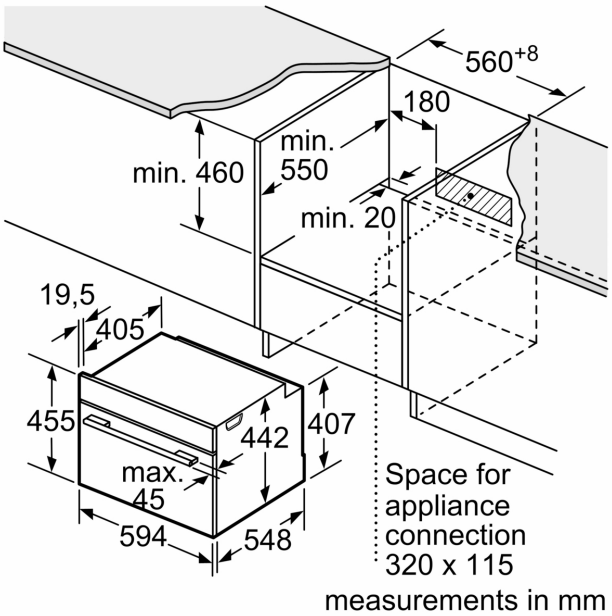

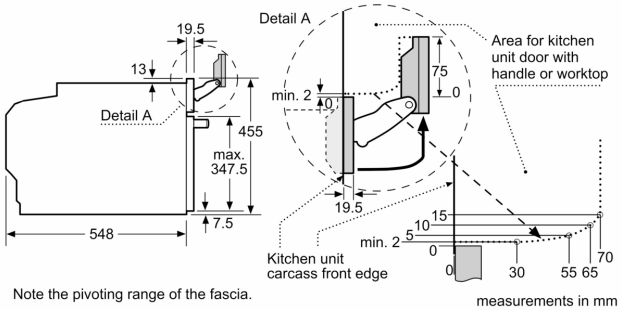

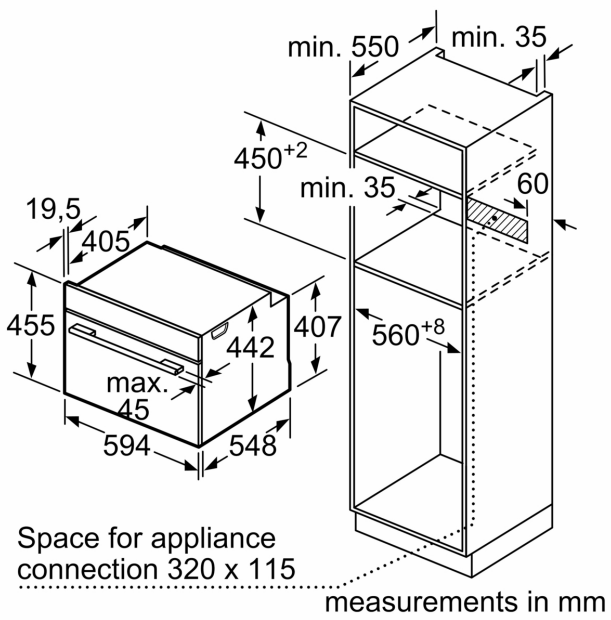

SIEMENS

Dimensioned drawings

Installation with a hob.

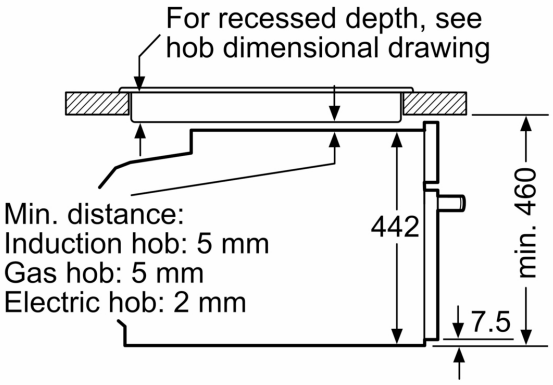

measurements in mm

If the compact appliance will be installed underneath a hob, the following worktop thicknesses (including substructure if necessary) must be taken into acccount.

Hob type	**min. worktop thickness**	
	fitted	flush
Induction hob	42 mm	43 mm
Full surface Induction hob	52 mm	53 mm
Gas hob	32 mm	43 mm
Electric hob	32 mm	35 mm