SIEMENS

iQ700, Built-In Fully Automatic Coffee Machine, Black CT918L1B0

- ✓ TFT-Touchdisplay Pro – Large colour touch display for comfortable operation.
- ✓ Discover the fantastic taste of international coffee specialties – coffeeWorld.
- ✓ The perfect aroma profile for every individual taste – aromaSelect.
- ✓ Save up to 30 individual coffee preferences – Favorites.
- ✓ autoMilk Clean – automatic steam cleaning of the milk system after every drink

Included accessories

1 x assembly screws, 1 x milk container, 1 x connection hose for milk frother, 1 x milk pipe, 1 x test strip, 1 x welcome-Box

Optional accessories

TZ40001	Insulated coffee jug
TZ70003	1 Brita Filter for Coffee Machine
TZ70033A	3 Brita Filter for Coffee Machine
TZ80001A	10 Cleaning Tablets for Coffee Machine
TZ80001B	10 Cleaning Tablets for Coffee Machine
TZ80002A	3 Descaling Tablets for Coffee Machine
TZ80002B	3 Descaling Tablets for Coffee Machine
TZ80004A	Care set Coffee Machine
TZ80004B	Care set Coffee Machine

Features

Technical Data

Design: ..... Built-in
Frothing nozzle: ..... No
Display: ..... Yes
Water protection system: ..... no
Portion sizes: ..... All cups
Dimensions: ..... 455x594x385 mm
Dimensions of the packed product (HxWxD): .....540x560x670 mm
Required niche size for installation (HxWxD): ..... 449x558x376 mm
Hot water spout: ..... No
Standby function: ..... Yes
Simultaneous preparation of 2 cups: ..... Yes
Included accessories: ..... 1 x assembly screws, 1 x milk container, 1 x connection hose for milk frother, 1 x milk pipe, 1 x test strip, 1 x welcome-Box
Fuse protection: .....10 A
Voltage: .....220-240 V
Frequency: .....50/60 Hz
Plug type: ..... Gardy plug w/ earthing
Product group: ..... Built-in coffee machine
Product name/family: .....Built-in coffee machine
Product name / Commercial code: CT918L1B0
Typology: ..... Fully automatic
Length electrical supply cord: ..... 170 cm
Maximum height for installation: ..... 449 mm
Dimensions: ..... 455x594x385 mm
Dimensions of the packed product (HxWxD): .....540x560x670 mm
Net weight: ..... 42.000 lbs
Net weight: ..... 19.0 kg
Gross weight: ..... 49.000 lbs
Gross weight: ..... 22.3 kg
Capacity water container: .....2.4 l

4 242003 895597

SIEMENS

iQ700, Built-In Fully Automatic Coffee Machine, Black CT918L1B0

Features

Flavour
- up to 33 beverages (incl. milk, milk foam and hot water) within appliance and Home Connect app
- warm milk, milk froth and hot water function
- aromaSelect – 3 different aroma profiles (mild-balanced-distinctive)
- adjustable milk ratio for classic milk-mix beverages
- intelligent strength adjustment – adaptive coffee management based on strength and size
- aromaDouble Shot – less bitterness in large beverages due to two brewing processes

Convenience
- TFT-Touchdisplay Pro - 6.8" TFT- color display with touch and slide functionality
- Favorites: save up to 30 personalised beverages
- automatic milk amount detection - suitable for included container, 1 liter milk carton or your individual container
- coffee pot function
- height adjustable bevarage outlet (up to 15 cm high glasses)
- oneTouch DoubleCup – get two cups at the touch of a button
- 2.4 l removable water tank

Performance
- silentCeram Drive – high-quality grinder made of wear-resistant ceramic
- water pump with 19 bar pressure

Hygiene
- autoMilk Clean – automatic steam cleaning after every drink
- calc'nClean – combined descaling and cleaning program for less effort
- removable brewing unit – for easy and hygienic cleaning
- dishwasher-proof: beverage outlet, drip tray and drip pans
- automatic reminder for cleaning, descaling or water filter change

Home Connect
- remote control – operate your appliance from everywhere
- coffeePlaylist – select several drinks in the app, prepared in your chosen order
- additional coffee know-how
- software update – always the newest software status
- online support
- Security: Security is of top priority at Home Connect. The Home Connect app has been tested and certified by TÜV IT. And the encrypted data transfer via Home Connect protocol protects against unauthorised access.

Miscellaneous
- integrated 0,7 l milk container
- 400 g bean container with aroma protection lid
- illuminated coffee outlet, stage and interor
- adjustable grinding degree (multi-level)
- child lock

Accessories
- included accessories: test strip, connection hose for milk frother, insulated milk container, milk pipe, welcome-Box
- Separately available accessories: cleaning tablets (TZ80001...), descaling tablets (TZ80002...), BRITA Intenza water filter (TZ70003/TZ70033A), care set for fully-automatic espresso makers (TZ80004...)

SIEMENS

iQ700, Built-In Fully Automatic Coffee Machine, Black CT918L1B0

Dimensioned drawings

Measurements in mm

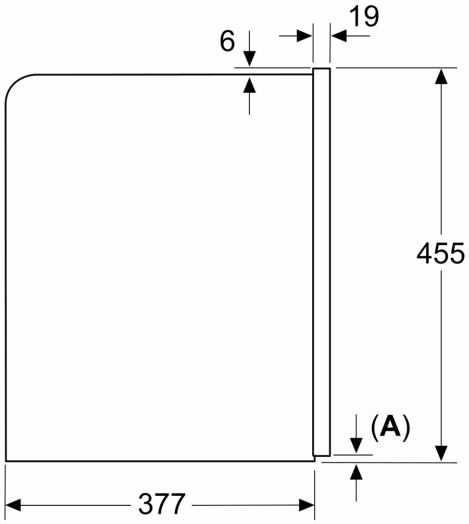

A: 7.5 mm

Measurements in mm

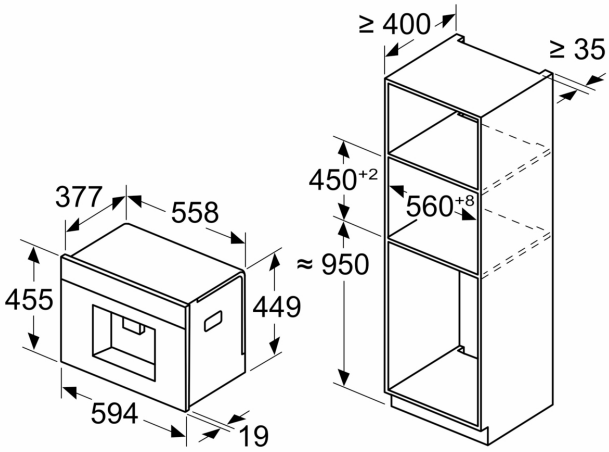

Bean and water containers are removed from the front
Recommended installation height 950–1450 mm

Measurements in mm
Left corner installation

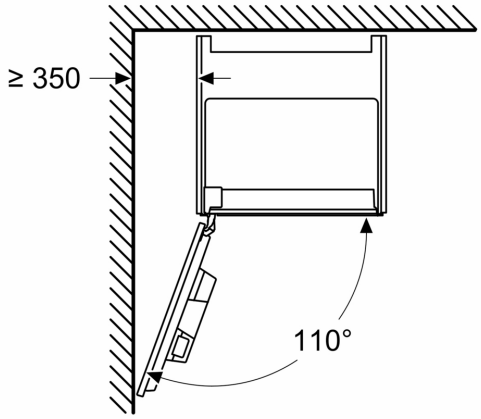

If using the 92° hinge limiter, the min. distance to the wall is only 100 mm
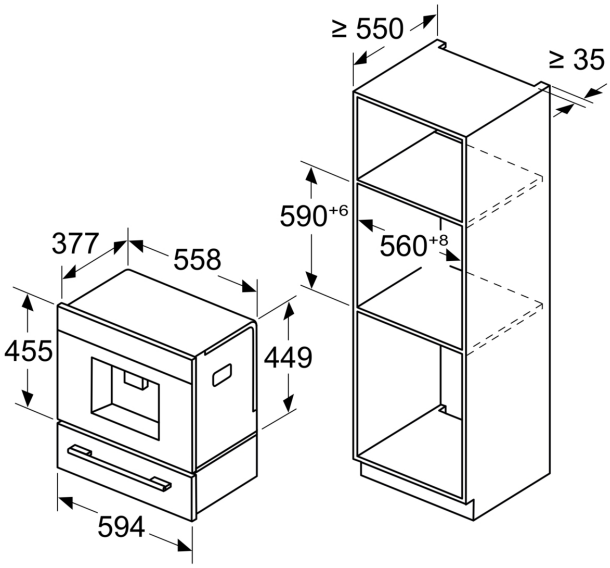
Measurements in mm