SIEMENS

iQ700, Built-in compact oven with microwave function, 60 x 45 cm, Black
CM978GNB1B

Included accessories

2 x combination grid, 1 x universal pan

Optional accessories

HZ327000 Baking stone, HZ531010 Baking tray, non-stick ceramic coated, HZ532010 Universal pan, non-stick ceramic coated, HZ617000 Pizza pan, enamelled, HZ629070 Air Fry & Grill tray, HZ631070 Baking tray, enamelled, HZ632070 Multipurpose pan, enamelled, HZ634000 Baking and roasting grid (standard), HZ636000 Glass pan, HZ65MA00 Assembly kit for vertical installation, HZ664000 Baking and roasting grid (steam), HZ66X600 Decor list, HZ66X650 Cover Strip, HZ915003 Glass roasting dish, 5,4 L

Shorten your cooking time thanks to varioSpeed, fast preheat and activeClean. And remote your oven from anywhere with Home Connect.

- ✓ cookControl Pro: excellent results, whatever the recipe.
- ✓ Oven Assistant with Voice Control: intuitively select the right programme.
- ✓ humidClean Plus: softens dirt by vaporising soapy water. Making it easy to wipe away.
- ✓ Home Connect with Remote Control: unlock the full potential of your smart oven.
- ✓ bakingSensor Plus and roastingSensor Plus: perfect baking and roasting results.

Features

Technical Data

Additional functions: ..... Microwave combination oven
Control panel: ..... Electronic
Dimensions: ..... 455x594x548 mm
Cavity dimensions: ..... 237 x 480 x 392 mm
Length electrical supply cord: ..... 150 cm
Weight: ..... 35.9 kg
Gross weight: ..... 39.1 kg
EAN code: 4242003901427
Maximum micro-wave power[1]: ..... 900 W
Connection Rating: ..... 3600 W
Fuse protection: ..... 16 A
Nominal power: ..... 220-240 V
Frequency: ..... 50; 60 Hz
Plug type: ..... no plug (electrical connection by electrician)
Included accessories: ..... 2 x combination grid, 1 x universal pan

4 242003 901427

[1] Intelligent inverter technology: maximum output power will be regulated to 600 W when used in longer operation

SIEMENS

iQ700, Built-in compact oven with microwave function, 60 x 45 cm, Black
CM978GNB1B

Features

Features
- Compact oven with microwave with 22 heating methods: conventional top & bottom heating, full width grill, half width grill, coolStart, bottom heat, intensive conventional heat, low temperature cooking, keep warm, dehydrate, plate warming, Conventional heat gentle, Microwave, 4D Hot air, Conventional heat, Full width grill, Half width grill, Hot air grilling
- Max. Power: 900 W; 5 Microwave power settings (90 W,180 W,360 W,600 W, boost) with Inverter (MW)
- Intelligent microwave inverter technology: For optimised results maximum output power will be regulated to 600 W when used in longer operation for gentler cooking.
- Temperature range 30 °C - 275 °C
- Cavity volume: 45 litres

Level independent telescopic rails
- 3 shelf positions
- 1 level telescopic shelf, pyrolitic proof

Design
- studioLine Black Steel Design
- Touch control With steel trim
- studioLine Glass handle
- Cavity inner surface: enamel anthracite

Cleaning
- activeClean
- hydrolyse program

Programmes/functions
- Oven Assistant with Voice Control
- SE63
- Electronic oven clock timer
- Digital temperature display with proposal
- Actual temperature display
- Heating-up indicator
- Temperature probe
- Drop down oven door, softClose, softOpen
- cookControl Plus
- Fast preheat
- coolStart
- LED light, Light on/off when door opened/closed
- Integral cooling fan
- WLAN - Home connect enabled

Accessories
- 2 x combination grid, 1 x universal pan

Features
- Maximum door temperature 30 °C
- Electronic door lock
- Control panel lock
- Automatic safety switch off
- Residual heat indicator
- Start button
- Door contact switch

Technical information
- Power cord length 150 cm Cable length
- Nominal voltage: 220 - 240 V
- Total connected load electric: 3.6 KW

Performance/technical information
- Appliance dimension (hxwxd): 455 mm x 594 mm x 548 mm
- Niche dimension (hxwxd): 450 mm - 455 mm x 560 mm - 568 mm x 550 mm
- “For-details-on-installation-and-ventilation requirements – please refer to the installation manual prior to fitting.”

iQ700, Built-in compact oven with microwave function, 60 x 45 cm, Black
CM978GNB1B

Dimensioned drawings

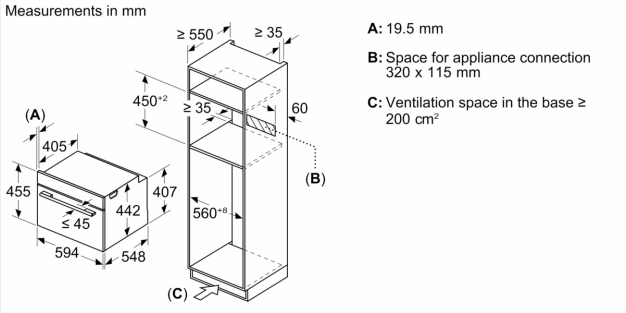

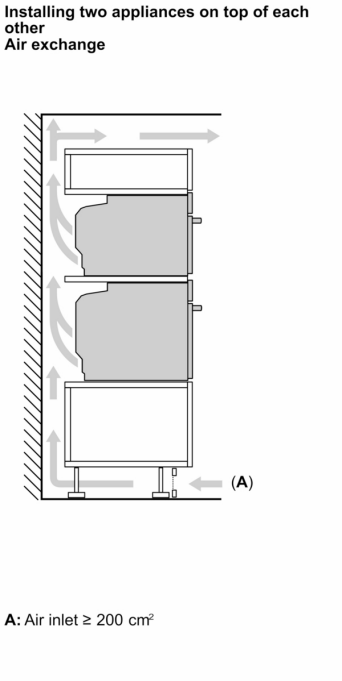

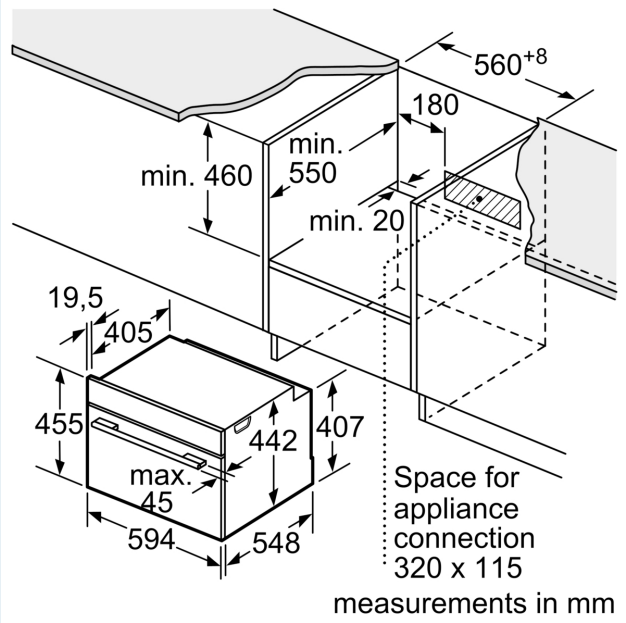

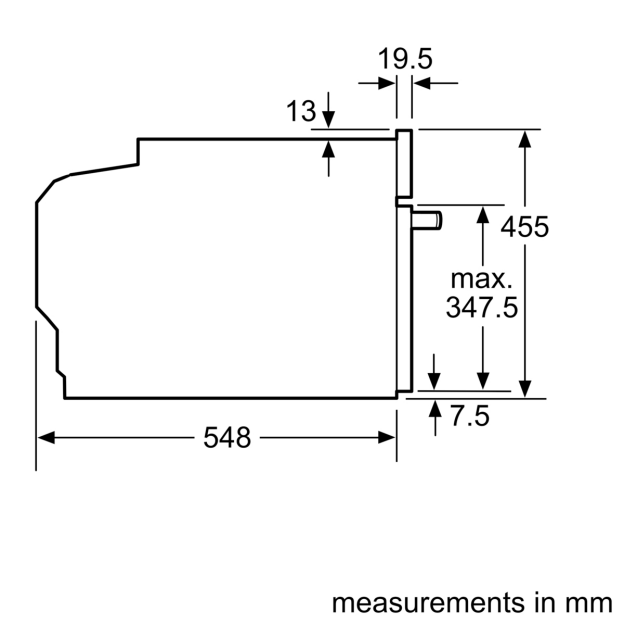

SIEMENS

Dimensioned drawings

Installation with a hob.

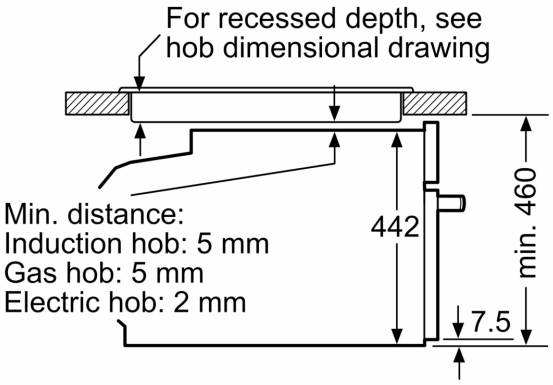

measurements in mm

If the compact appliance will be installed underneath a hob, the following worktop thicknesses (including substructure if necessary) must be taken into acccount.

Hob type	**min. worktop thickness**	
	fitted	flush
Induction hob	42 mm	43 mm
Full surface Induction hob	52 mm	53 mm
Gas hob	32 mm	43 mm
Electric hob	32 mm	35 mm